BROADBAND BEAM SPLITTER PLATES

Specification

Material:	N-BK7 or Click this to Glass List
Dimension Tolerance:	±0.1mm
Thickness Range:	0.5 ~ 50.0mm
Parallism:	< 20 arc seconds
Surface Figure:	λ/4@632.8nm
Surface Quality:	40 / 20
Beam Deviation:	<3 minutes
Bevel:	0.25 × 45°
Clear Aperture:	>90%
Design Wavelength:	450 - 1550nm
Coating:	[Incidence angle: 45 degree]
	S1: Broadband partial reflectance S2: BBAR-coatings
T/R:	50/50 ±5%, for random polarization T=(Ts+Tp)/2, R=(Rs+Rp)/2

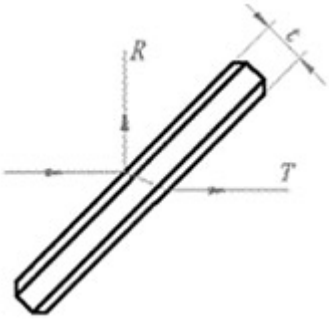

PRODUCTS LIST

Wavelength [nm]	450 - 650	650 - 900	900 - 1200	1200 - 1550
Dimension [mm]	**Part No.**	**Part No.**	**Part No.**	**Part No.**
12.7 × 12.7 × 3	SSL-RO-BBP-001	SSL-RO-BBP-101	SSL-RO-BBP-201	SSL-RO-BBP-301
25.4 × 25.4 × 3	SSL-RO-BBP-002	SSL-RO-BBP-102	SSL-RO-BBP-202	SSL-RO-BBP-302
50.8 × 50.8 × 3	SSL-RO-BBP-003	SSL-RO-BBP-103	SSL-RO-BBP-203	SSL-RO-BBP-303
Φ25.4 × 3	SSL-RO-BBP-004	SSL-RO-BBP-104	SSL-RO-BBP-204	SSL-RO-BBP-304

TEL: + 86 - 21 - 56746019 Email: sales@sanctitylaser.com FAX: + 86 - 21 - 56641107
Address: 6F, Building 59, No.800 Hulin Road Shanghai China