ROOF PRISMS

Specification

Material:	N-BK7 or Click this to Glass List
Dismension Tolerance:	+0 / -0.1mm
Angle Tolerance:	±3 arc min
Precision Series:	<5 arc seconds
Surface Figure:	λ/4@632.8nm
Surface Quality:	40 / 20
Bevel:	0.2 - 0.5mm
Clear Aperture:	>90%
Coating:	Specified by customer

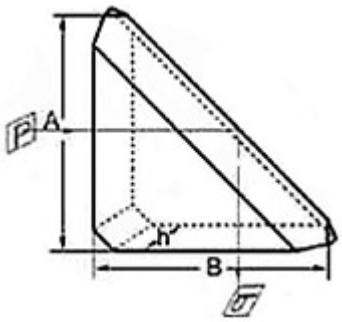

PRODUCTS LIST

Part No.	A [mm]	B [mm]	h [mm]
SSL-RO-RP-001	27.4	20.0	20.0
SSL-RO-RP-002	41.1	30.0	30.0
SSL-RO-RP-003	54.8	40.0	40.0
SSL-RO-RP-004	68.5	50.0	50.0
SSL-RO-RP-005	82.2	60.0	60.0

TEL: + 86 - 21 - 56746019 Email: sales@sanctitylaser.com FAX: + 86 - 21 - 56641107
Address: 6F, Building 59, No.800 Hulin Road Shanghai China